Prozone
by barwick

For the Contemporary Bathroom

Prozone provides **essential hidden support** for your new bathroom

- Wall Hung Support Frames
- Concealed Cisterns
- Designer Flush Plates
- Bathroom Wastes

January 2015

Britton Curve Wall Hung Basin & WC

Get this contemporary look with Prozone Support Frames.

Support - Prozone frames give the WC, bidet or basin all the support it needs to be wall hung.

Space - Concealed behind the wall the Prozone frame creates the sense of more space by keeping the floor area clear and the cistern hidden. Ideal for all bathrooms, large or small.

Clean - Fewer places for dust and dirt to collect so cleaning is far easier. Simply sweep or mop underneath the sanitaryware.

10 year Guarantee
3 years flush & intlet

Max Load
for all WC Support Frames
63 Stone (400kg)

Prozone
by barwick

Prozone
by barwick

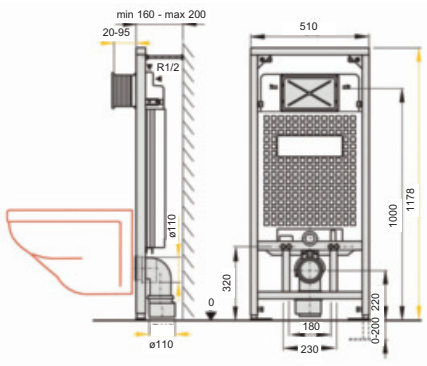

PR03

118cm WC Frame with Cistern

PR03 1176 x 510mm **£226.04**

Max Load 63 Stone

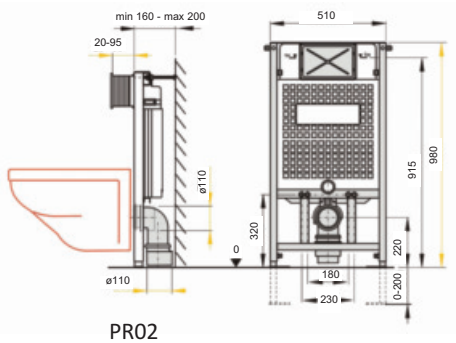

PR02

98cm WC Frame with Cistern

PR02 980 x 510mm **£247.84**

Max Load 63 Stone

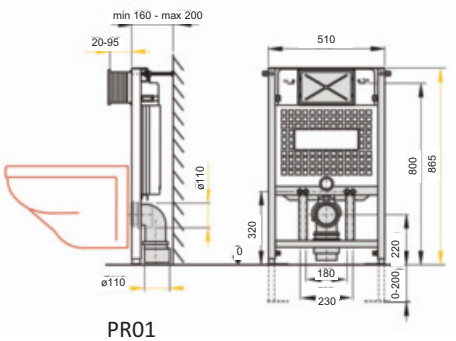

PR01

87cm WC Frame with Cistern

PR01 866 x 510mm **£247.84**

Max Load 63 Stone

This 87cm frame is ideal for use under windows or other height limited spaces!

Dual Flush - Flush Plates

Ellipse

Chrome
PR40 **£47.00**

Alto

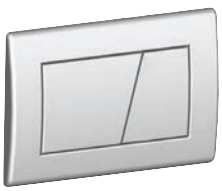

Chrome
PR43 **£56.00**

Quadro

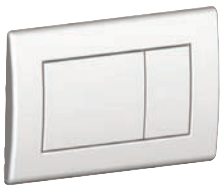

Chrome
PR41 **£57.68**

Edge

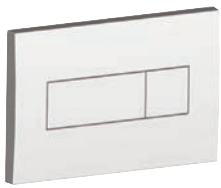

Chrome
PR42 **£85.16**

Flush Plate Information
- 247 (w) x 165 (h) mm
- Dual Flush

WC Frame Information
- Requires Flush Plate. Choose Ellipse, Alto, Quadro or Edge
- Cistern has insulated shell to prevent condensation.
- For installation of a WC with fixings of 180mm to 230mm.
- 4 / 2.6 litre Eco Flush (switchable to 6 / 4 litre).
- Integral dual flush front operated cistern.
- Complete with pre-wall brackets & outlet connection
- Adjustable feet up to 200mm.
- Maximum Load 400kg

Furniture Frame for Wall Hung WC

support for the WC is provided by a frame inside the furniture

Noble Trio Funiture, Vitra S20 WC & Vitra S50 Basin

Max Load
for all WC Support Frames
63 Stone (400kg)

10 year Guarantee
3 years flush & intlet

Dual Flush
choose flush plate
(right)

Get this contemporary look with Prozone Support Frames.

Support - Prozone frames give the WC, bidet or basin all the support it needs to be wall hung.

Space - Concealed behind the wall the Prozone frame creates the sense of more space by keeping the floor area clear and the cistern hidden. Ideal for all bathrooms, large or small.

Clean - Fewer places for dust and dirt to collect so cleaning is far easier. Simply sweep or mop underneath the sanitaryware.

Prozone
by barwick

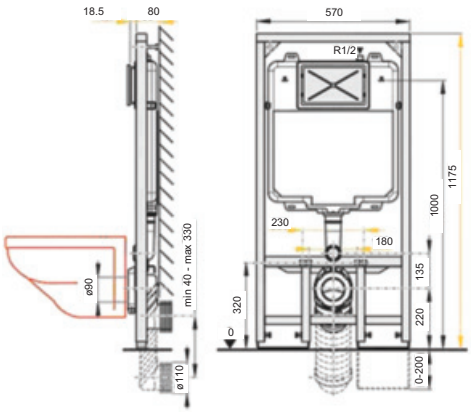

Only 8cm projection

Slimline WC Frame with Cistern

PR04 1176 x 510mm **£321.36**

Only 8cm projection

Information
- Requires Flush Plate. Choose Alto, Quadro, Ellipse or Edge
- Integral dual flush front operated cistern.
- Cistern has insulated shell to prevent condensation.
- Complete with pre-wall brackets & outlet connection.
- For installation of a WC with fixings of 180mm to 230mm.
- Adjustable feet up to 200mm.
- 4 / 2.6 litre Eco Flush (switchable to 6 / 4 litre).
- Maximum Load 400kg

Dual Flush - Flush Plates

Ellipse

Chrome
PR40 **£47.00**

Alto

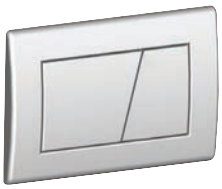

Chrome
PR43 **£56.00**

Quadro

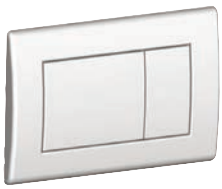

Chrome
PR41 **£57.68**

Edge

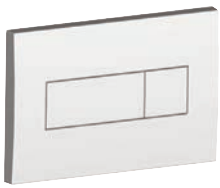

Chrome
PR42 **£85.16**

Flush Plate Information
- 247 (w) x 165 (h) mm
- Dual Flush

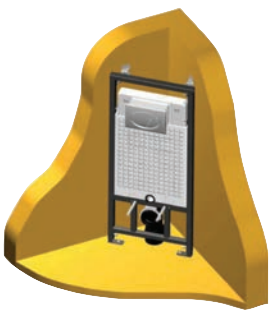

Fit your WC into a corner

PR05 Corner brackets (pair) **£34.19**

Brackets to enable use of all Prozone WC frames in corner installation.

PR01 (87cm), PR02 (98cm), PR03 (118cm), PR04 (slimline)

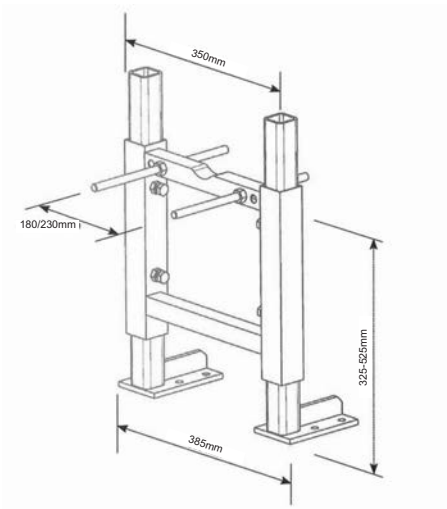

Furniture Frame for Wall Hung WC

Designed to fit inside furniture units.

PR07 385 (w) 325 / 525 (h) mm **£168.00**

PR31 Dual Flush Concealed Cistern **£99.95**
includes 3/6 litre dual flush chrome push button

Options:

PR08 Waste Outlet Kit - Angled **£27.60**

PR09 Waste Outlet Kit - Straight **£28.80**

Information
- For installation within a WC furniture unit.
- Maximum width 500mm
- Requires PR31 cistern also listed above
- Legs can be cut down to fit

Wall Hung Basin Frames

Vitra Sunrise Basin

Prozone basin support frames are
Hidden Inside The Wall!

Get this contemporary look with Prozone Support Frames.

Support - Prozone frames give the WC, bidet or basin all the support it needs to be wall hung.

Space - Concealed behind the wall the Prozone frame creates the sense of more space by keeping the floor area clear. Ideal for all bathrooms, large or small.

Clean - Fewer places for dust and dirt to collect so cleaning is far easier. Simply sweep or mop underneath the basin instead of around pedestals.

10 year Guarantee

Max Load for all Basin Support Frames **23 Stone (150kg)**

Wall Hung Bidet Frames

Vitra Sunrise WC & Bidet

Prozone bidet support frames are
Hidden Inside The Wall!

10 year Guarantee

Max Load for all Bidet Support Frames **63 Stone (400kg)**

Prozone by barwick

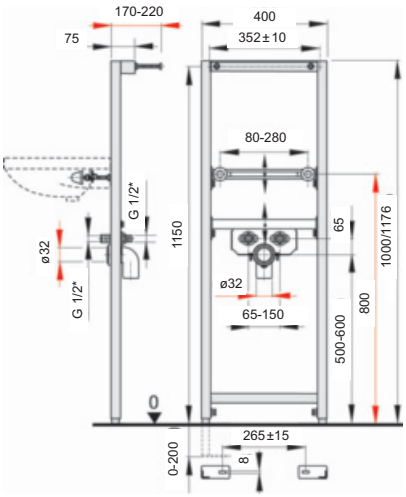

Basin Frame

In wall support frame for wall hung basins

PR12	1170 x 400mm	**£143.32**
PR11	1000 x 400mm	**£159.26**

Information
- For installation of a basin
- Adjustable basin fixings between 80mm - 280mm
- Adjustable inlet centres
- Adjustable feet up to 200mm
- Maximum Load 150kg

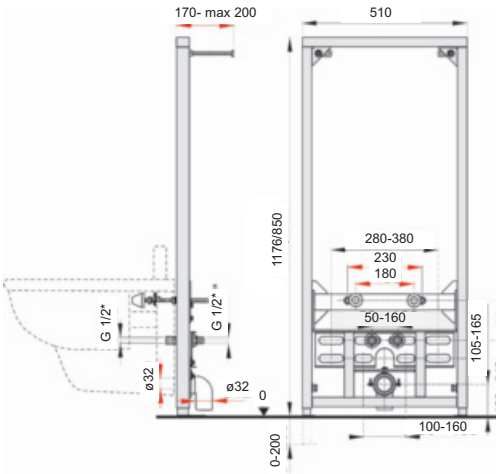

Bidet Frame

In wall support frame for wall hung bidets

PR15	850 x 510mm	**£224.09**
PR16	1176 x 510mm	**£201.70**

Information
- For installation of a bidet with fixings of 180mm - 230mm
- Adjustable feet up to 200mm
- Maximum Load 400kg

Britton Fine Bidet & Back to Wall WC

Create a minimalist look with Prozone Concealed Cisterns.

Space - Prozone concealed cisterns create more space. Hidden inside the wall, all you see is the WC pan.

Clean - With fewer places for dust and dirt to collect it's easier to clean.

10 year Guarantee
3 years flush & intlet

Dual Flush
choose flush plate
(right)

Noble Dueto Furniture

Store and hide all those essential items inside stylish furniture units

Fits in Furniture - At only 450mm wide Prozone furniture cisterns are specifically designed to fit into even the smallest furniture units.

Storage - Furniture hides ugly pipework and provides storage.

Eco - Save water with a Prozone 3/6 litre dual flush concealed cistern.

10 year Guarantee
3 years flush & intlet

Max Load
for all WC Support Frames
63 Stone (400kg)

Designed for furniture

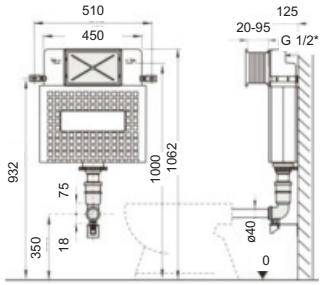

Concealed Cistern

For use with back to wall WCs

PR30 Dual Flush Concealed Cistern **£153.84**

Concealed Cistern Information
- For installation within a WC furniture unit.
- Minimum width 500mm
- Insulated shell to prevent condensation.
- Front / Top access.
- 6 / 3 litre flush

Dual Flush - Flush Plates

Ellipse

Chrome
PR40 **£47.00**

Alto

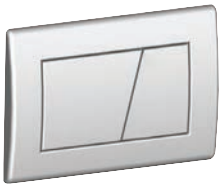

Chrome
PR43 **£56.00**

Quadro

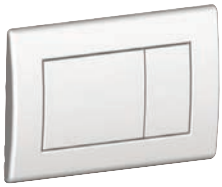

Chrome
PR41 **£57.68**

Edge

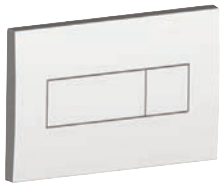

Chrome
PR42 **£85.16**

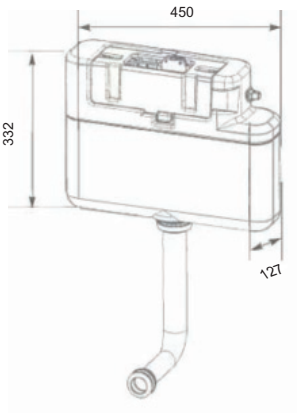

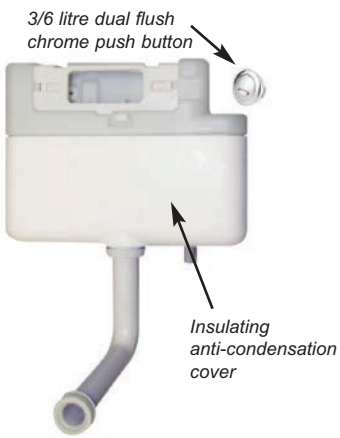

Concealed Furniture Cistern

Designed to fit inside furniture units.

PR31 Dual Flush Concealed Cistern **£99.95**

includes 3 / 6 litre dual flush chrome push button

Concealed Furniture Cistern Information
- For installation within a WC furniture unit.
- Maximum width 500mm
- Requires PR31 cistern also listed above
- Legs can be cut down to fit

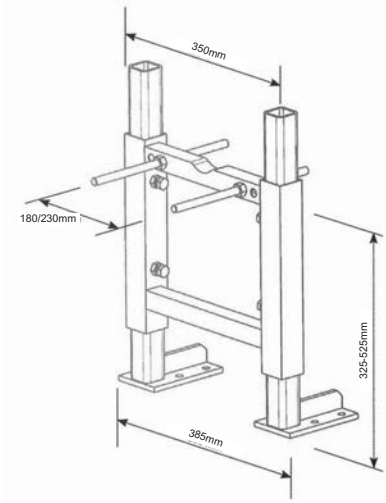

Furniture Frame for Wall Hung WC

Designed to fit inside furniture units.

PR07 385 (w) 325/525 (h) mm **£168.00**

PR31 Dual Flush Concealed Cistern **£99.95**
includes 3/6 litre dual flush chrome push button

Options:

PR08 Waste Outlet Kit - Angled **£27.60**

PR09 Waste Outlet Kit - Straight **£28.80**

Furniture WC Frame Information
- Requires Flush Plate. Choose Alto, Quadro, Ellipse or Edge
- 4 / 2.6 litre Eco Flush (switchable to 6 / 4 litre).
- Insulated shell to prevent condensation.

Sprung Plug Basin Waste - Slotted

CW60CB Sprung Plug Basin Waste Slotted **£26.36**

Sprung Plug Basin Waste - Un-Slotted

CWU60CB Sprung Plug Basin Waste Un-Slotted **£26.36**

The waste is one of the few mechanical parts of your bathroom. ***Prozone is high quality and still well priced so you don't need to compromise.***

Open Flowing Domed Basin Waste

DWU60CB Open Flowing Waste **£32.23**

Shower Waste - 60mm

STW3M **£16.45**
Shower Waste including trap. 90mm Diameter

Shower Waste - 90mm

ST90CB1070 **£43.38**
Shower Waste including trap. 90mm Diameter

Bath Pop-up Waste

198PUWCP	Bath Pop-up Waste	**£53.46**

Sprung Plug Bath Waste

UPDOWN	Sprung Plug Waste	**£56.41**

Plug & Chain Bath Waste

414CP	Plug & Chain Waste	**£48.13**

The waste is one of the few mechanical parts of your bathroom. ***Prozone is high quality and still well priced so you don't need to compromise.***

Extended Bath Pop-up Waste

065210051	Bath Pop-up Waste	**£76.38**

Your local stockist

Prozone
by barwick

Ref: PROLIT/ 01.15

Prices are inclusive of VAT at 20%

Distributed by Barwick Bathroom Distribution LLP

We reserve the right to alter or amend product details without prior notice.
All dimensions are nominal. Errors and omissions excepted

www.prozonebathrooms.co.uk